REQUEST FOR INFORMATION

For

OPTICAL TRANSPORT PLATFORM

In support of the

MID-ATLANTIC CROSSROADS NETWORKS

Issued by the
Mid-Atlantic Crossroads

April 16, 2010

Information for Responders

Information in response to this Request for Information ("RFI") must be delivered electronically (email) in a **PDF** file format to:

Peter O'Neil
Executive Director
Mid-Atlantic Crossroads
8400 Baltimore Avenue Suite 102
College Park, MD 20740
poneil@maxgigapop.net

No later than 5:00 PM eastern daylight time on May 21, 2010
Responses received after that will not be considered.

For questions and requests for clarifications and/or additional information regarding this call for information, please contact the above at:

Phone: 301.314.0429
Email: poneil@maxgigapop.net

1 PURPOSE

The Mid-Atlantic Crossroads (MAX) requests descriptive and pricing information from optical vendors to enhance existing Research and Education (R&E) metro network facilities with emerging 100 Gigabits per second (100Gb/s) equipment to support data intensive science exploration, modeling, and discovery.

The MAX R&E network also plans to upgrade its 10Gb/s peering connections to 100Gb/s with Internet2, the Energy Sciences network (ESnet), National LambdaRail (NLR), all of whom have plans for upgrading to 100Gb/s, and the Next Generation Internet Exchange - East (NGIX-E) exchange point operated by MAX for the federal research networks. MAX supports a number of campuses with large scale data flow requirements for the astronomy, biological, environmental, computer science, engineering, geo-science, and physical science communities. MAX participants include forty seven universities, federal agencies, and government laboratories in Maryland, Virginia, and the District of Columbia. Efforts by MAX to replace current

Our region's faculty and scientists have substantial impact across many fields of data intensive science, engineering, and education ranging from astronomy to physics to atmospheric to biological systems. The ability of MAX to provide 100G networking will substantially contribute to the advancement of areas of great societal relevance, including Earth and environmental science, multi-scale modeling, transportation and linguistics. It will also advance computer science, imaging, data-curation, and visualization.

As a 10-year old Regional Optical Networking organization, MAX has the necessary engineering and management experience to successfully deploy, operate, and support 100G infrastructure capabilities. Use of emerging optical capabilities of new ROADMs, wavelength selectable switches, and tunable lasers will allow MAX research participants to extend previous and current work on the dynamic provisioning of wave level bandwidth.

In particular, we anticipate continuing our efforts on data plane and control plane communication infrastructure. There are a number of topical areas MAX shares a keen interest with the National Science Foundation GENI and Network Science & Engineering (NetSE) initiatives, other Regional Optical Networks, and many of our university and federal mission agency participants. These include:

a. Exploring how to partition signal and data processing and communication functions between optical and electronic technologies

b. Using ROADMs, photonic cross-connects, wavelength selectable switches and tunable lasers to provision automatically, provide flexible adjustment of bandwidth and restoration that combines electronic grooming with transparent wavelength management at scale

c. The ability to optically monitor signal quality and link and node states

d. Provisioning optical wave level dynamic bandwidth allocations

e. Exploring the use of optical transport and transmission mesh networks that are self-configuring, self managing, robust, and secure

f. Investigating "cross-layer" design principles to disrupt boundaries between physical layer, network architecture, and application research communities

As part of your response to this request, MAX welcomes offers to partner on some or all of the data and control plane topics summarized above.

2 PREPARING AND SUBMITTING A RESPONSE

Responses must contain all information that the Responder wishes to be taken into account in evaluating their submission. The information provided must be responsive to all requested services described in this RFI. The text of the RFI response is to be made electronically available in PDF format.

3 RESPONSE SELECTION AND AWARD PROCESS

3.1 PRELIMINARY EVALUATION

The responses will first be reviewed to determine if mandatory requirements are met. Failure to meet mandatory requirements may result in the response being rejected.

3.2 RESPONSE EVALUATION

An evaluation committee comprised of MAX engineering staff and participant technical advisory committee members will review all accepted responses. The committee may review and contact references, request oral presentations, or conduct an onsite visit and use the results in rating the responses.

The costs used for evaluation purposes will be the complete life cycle cost of the services required to fulfill all mandatory requirements. Separable costs associated with "desirable" or "optional" functionality will not be included in the calculation. However, these costs, and the availability of this functionality, may be taken into consideration in developing an overall evaluation of a response. The contract award, if made, will be made on the basis of the best cost/benefit value ratio as determined by MAX and as informed by the evaluation committee.
The decision of MAX to bid to one bidder or to make no award at all is final. Bidders may not contest the award.

The following additional general criteria must be met:

- Responsible and responsive information that meets or exceeds specifications in all sections of the RFI document, including submission of data requested;
- Ability to deliver services in the time period requested;
- Demonstrated ability to provide responsive, flexible, and reliable services;
- Demonstrated experience in providing same or similar services;
- Demonstrated technical and control plane management expertise in the particular areas required by MAX; and
- Positive feedback from references

The evaluation of the responses and names of other bidders will not be made available to bidders at any time, whether before or after award, if any.

3.3 RIGHT TO REJECT RESPONSES AND NEGOTIATE CONTRACT**TERMS**

MAX reserves the right to reject any or all responses. MAX may negotiate the terms of the contract, including the award amount, with the selected Responder prior to entering into a contract. If contract negotiations cannot be concluded successfully with the highest scoring Responder, MAX may negotiate a contract with the next highest scoring Responder or choose to make no award at all.

3.4 RESPONSE TO THE RFI SPECIFICATIONS

The Responder shall explain in sufficient detail how their services meet the requirements and specifications stated in this RFI. All sections of this RFI should be addressed, whether such services are offered or not.

3.5 GENERAL INSTRUCTIONS ON PREPARING COST RESPONSES

The cost response shall be submitted as a separate PDF file, sent and attached with, but separate from, the written response. All prices, costs, and conditions outlined in the response identifying all elements that are included in the vendor's OTP offering shall remain firm and valid for 120 days starting on the due date for responses.

4 SYSTEM REQUIREMENTS

4.1 Network Topology

The research network physical topology is shown on Figure-1. Table-1 and Table-2 summarize the Add/Drops requirements for both 10GbE and 100GbE, as well as fiber type, loss, distance and degree.

4.2 Describe the product physical sizes and capacity

4.3 Describe power requirements

4.4 Do you support both AC and DC power?

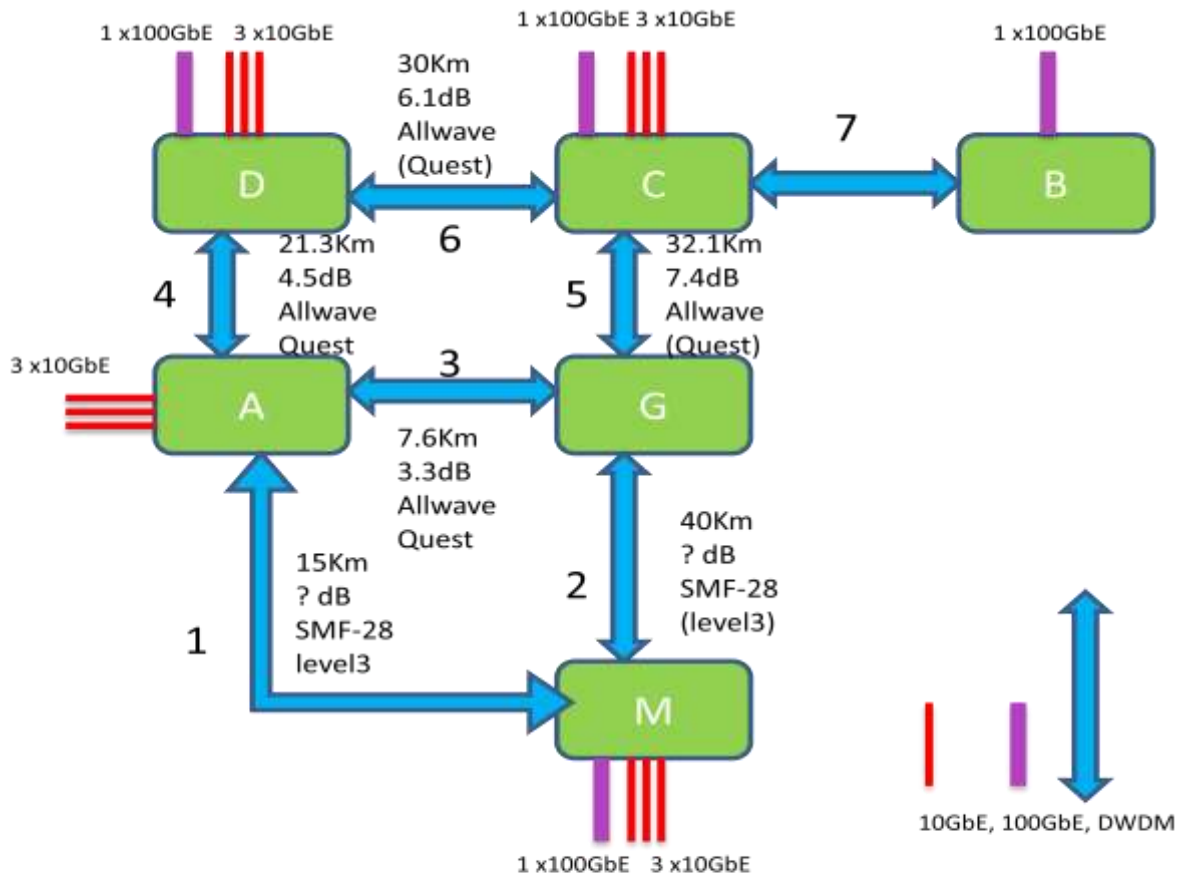

Figure 1 : RESEARCH NETWORK – Physical Connectivity

node	10 GbE Add/Drops	100 GbE Add/Drops	degree
A	3	0	3
B	?	1	1
C	**3**	**1**	**4**
D	3	1	2
G	0	0	3
M	3	1	2

Table 1 – Add/Drops and Degree

Id	src-dst	Distance	Loss	Fiber Type
1	A to M	15km	?	SMF-28
2	G to M	40km	?	SMF-28
3	A to G	7.6km	7.4dB	Allwave
4	A to D	7.6km	7.4dB	Allwave
5	C to G	32.1	7.4dB	Allwave
6	C to D	30km	6.3dB	Allwave
7	C to B	?	?	?

Table 2 – Fiber distances, loss, and type

5 DWDM REQUIREMENTS

5.1 Describe in details the OTP design engineering rules for wavelengths in the C band, and including engineering rules for an ADD, DROP, and PASSTHRU paths through the OTP.

5.2 How many C-band wavelengths does the OTP support ? does it work at 50 GHz or 100 GHz ITU grid channel spacing ?

5.3 What are the supported fiber types ?

5.4 How many nodes in a ring can the OTP support at 100Gb/s and 1E-18 ?

5.5 What is the maximum number of optical pass-throughs that an OTP supports?

5.6 Does the OTP support simultaneous operation at 10 and 100 Gb/s rates ? Does it require a guard band ?

5.7 Describe how the current use of 10Gb/s DCM modules is affected by the deployment of 100Gb/s wavelengths on the same fiber.

6 SWITCHING REQUIREMENTS

6.1 Describe the switching capacity, modularity, and scalability – beginning with degree 2, evolve to higher degrees.

6.2 Is the OTP in-service upgradable to higher degrees ? describe the upgrade procedure ?

6.3 Are all wavelengths accessible for add/drop ? is OTP capable of 25%, 50% and 100% add/drop. Provide details regarding your products add/drop architecture and capabilities.

6.4 Does the OTP support colorless add/drop?

6.5 What is the max 100Gb/s add/drops in one shelf ?

6.6 What other circuits packs are need for an additional add/drop shelf ?

6.7 Is the OTP's optical switching WSS based ?

6.8 What is the insertion loss on the WSS ?

6.9 What is the number of wavelengths in the OTP MUX/DEMUX ?

6.10 How many different MUX-DMUXes are needed to support the whole OTP spectral range?

6.11 Is the MUX-DMUX a Circuit Pack of the OTP or an external third-party element ?

6.12 Describe the optical filter characteristics of the MUX-DEMUX Circuit pack

6.13 Does the Optical Switch Fabric include an OCM, a pre and post amplifiers ?

6.14 is the OTP supervirory channel in-band ?

6.15 Is the OTP supervisory channel on the 1510 wavelength ?

6.16 Does the WSS-based switching support multicast at the optical layer ?

6.17 Can the WSS-based switching be configured to work at either 50 GHz or 100 GHz ITU grid channel spacing ?

6.18 Does the OTP support tunable optics for 100Gb/s, tunable over the full system spectral range ?

6.19 Does the OTP provide a grooming internal OTN fabric ? If yes, what is its capacity ?

7 SERVICES

7.1 Is the 100Gb/s service based on a 100G coherent transponder ?

7.2 Does the 100Gb/s service utilize 2 wavelengths to transmit a 100Gb/s ?

7.3 Is your 100Gb/s service based on the OIF 100G MSA module standard ?

7.4 Does the 100Gb/s service utilize the PM-QPSK modulation ? If yes, does the receiver includes the ADC and the FEC ?

7.5 Is the 100Gb/s transponder a double-width transponder (takes 2 slots) ?

7.6 Does the 100Gb/s transponder utilize 2 ports ? Describe how the 2 ports are used for the 1+1 protection service .

7.7 Do you support a 1+1 protection service that protects the transponders (wye cable type) ?

7.8 Do you support an autorestoration service ? Does it require manual intervention during the restoration phase.

7.9 Do you support an M:N protection service ? If yes describe its functionality. If not, do you have a plan to support it in the future ?

7.10 How does the OTP determine/localize the faulty fiber link when service is degraded at the destination receiver ?

7.11 Does the OTP provide a cost-effective approach to hand-off a 100Gb/s service to another co-located vendor platform ? Include a drawing if necessary.

7.12 Does the 100Gb/s transponder offers the choice of 1x100Gb/s or 10x10Gb/s on the client side ?

7.13 Does the OTP offer 10x10Gb/s Muxponder service on a single 100Gb/s wavelength on the line side ?

7.14 Do you support alien wavelengths ?

7.15 Do you support third-party MSA pluggable optics ?

7.16 What are the MEF standards supported by the OTP in the current software release ? What is planned for the next software release ?

7.17 We are curious about your MEF certifications, tells about them especially MEF-9, MEF-14, MEF-18, and MEF-21.

8 CONTROL PLANE

8.1 Does the OTP include a GMPLS based control plane ? Which features (RFCs) are supported ?

8.2 Does the OSPF-TE part of GMPLS support multiple areas ?

8.3 Do you provide access to some of the APIs for research purposes ?

9 OPTICAL PERFORMANCE

9.1 Does the OTP include an Optical Performance Monitoring System (OPM) ?

9.3 What performance data is available on the EMS ?

9.4 What performance data is available on the CLI ?

9.5 Is the OPM used in any way in fault localizations ?

10 DEVICE MANAGEMENT (CAPABILITY RESIDENT ON THE ROADM)

10.1 Does the OTP support a secure web interface ?

10.2 Does the web interface include provisioning, fault management, and Performance ?

10.3 Does the web interface support Software Installation and Download

10.4 What is the Operating System resident in the OTP ?

11 ELEMENT AND NETWORK MANAGEMENT SYSTEM

11.1 Does the OTP provide a complete EMS support for all its feature and capabilities

11.2 Is the EMS deployed on a UNIX-based platform ?

11.3 What north-bound interfaces are supported on the EMS ?

11.4 Is the EMS capable of remote software back-up and restore ?

11.5 Does the EMS utilize SNMP V3 to talk to the OTP ?

11.6 Does the EMS utilize TL/1 to communicate with the OTP ?

11.7 Does the OTP provide an NMS ?

11.8 Do you provide access to some of the APIs for research purposes ?

12 SECURITY

12.1 What are the security protocols supported on the network element ?

12.2 What are the security protocols supported on the northbound interfaces

13 MAINTENANCE

13.1 What are is inluded in the standard maintenance package ? does it include installation and training in our site or your site ?

.